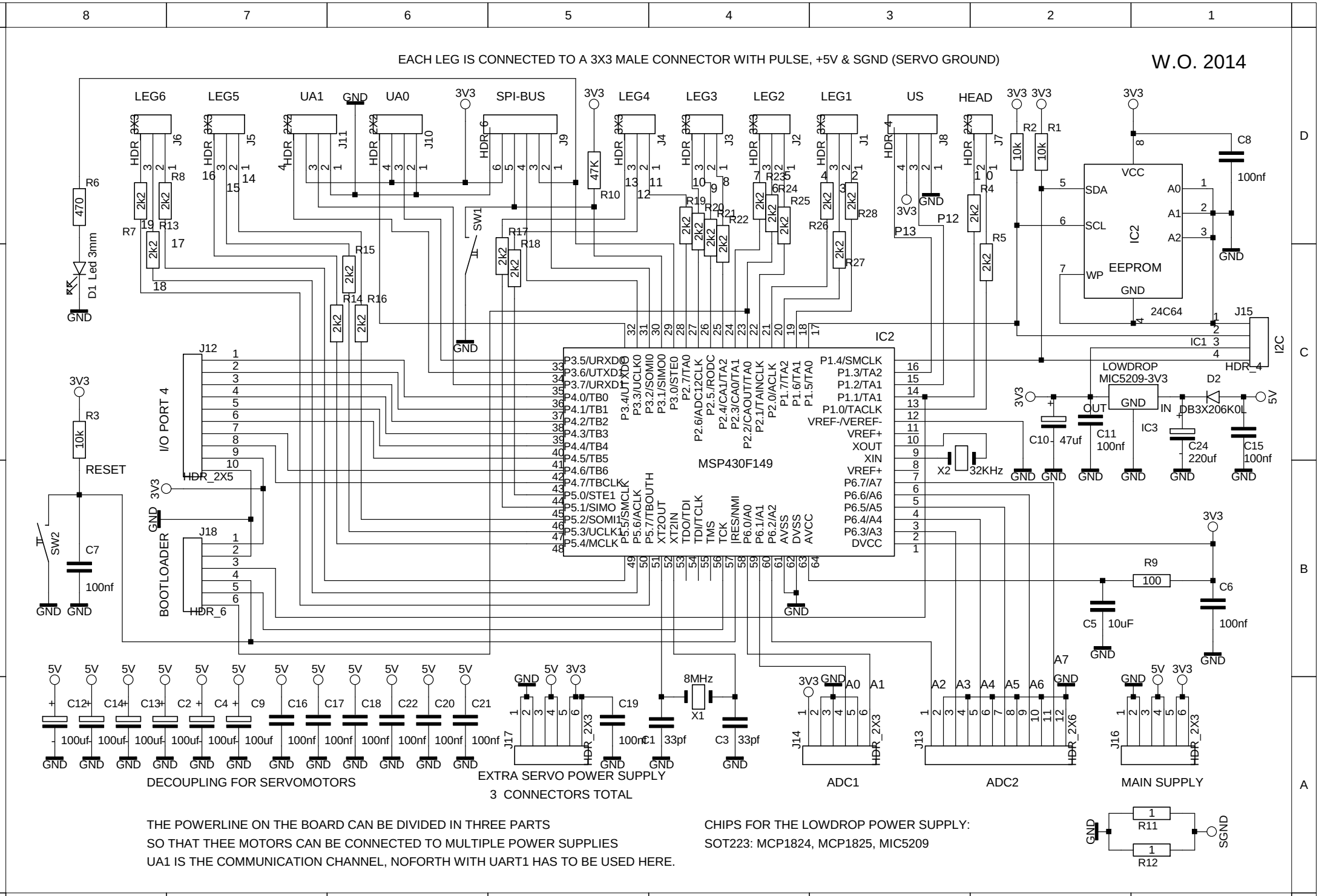
EACH LEG IS CONNECTED TO A 3X3 MALE CONNECTOR WITH PULSE, +5V & SGND (SERVO GROUND)
W.O. 2014
LEG6
LEG5
UA1
UA0
SPI-BUS
LEG4
LEG3
LEG2
LEG1
US
HEAD
MSP430F149
IC2
EEPROM
24C64
LOWDROP
MIC5209-3V3
I/O PORT 4
BOOTLOADER
RESET
DECOUPLING FOR SERVOMOTORS
EXTRA SERVO POWER SUPPLY
3 CONNECTORS TOTAL
ADC1
ADC2
MAIN SUPPLY
THE POWERLINE ON THE BOARD CAN BE DIVIDED IN THREE PARTS
SO THAT THEE MOTORS CAN BE CONNECTED TO MULTIPLE POWER SUPPLIES
UA1 IS THE COMMUNICATION CHANNEL, NOFORTH WITH UART1 HAS TO BE USED HERE.
CHIPS FOR THE LOWDROP POWER SUPPLY:
SOT223: MCP1824, MCP1825, MIC5209